Arm-mounted luminaire TANEO TND 2100/930-965/D

113736000-00810093

Waldmann
ENGINEERS OF LIGHT

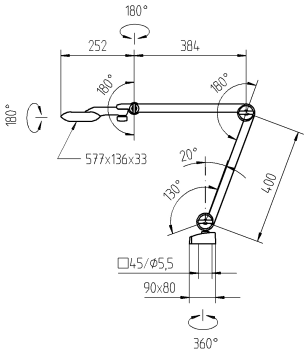

20 YEARS warranty

CE

CEE 7/VII

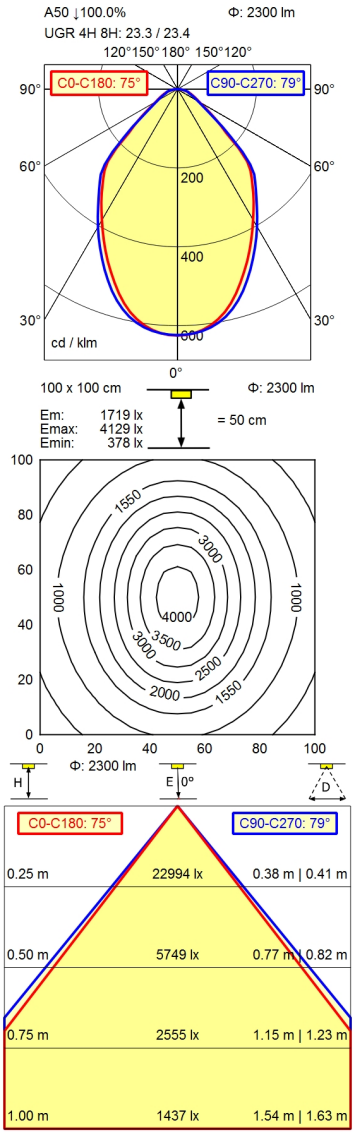

Light source	LED
Work equipment	Electronic transformer
Connected load	100 - 240 V; AC; 50 Hz; 60 Hz
Secondary tension	24 V
Power consumption	ca. 31 W
Sec. power consumption	ca. 27 W
Luminous flux	approx. 2.300 lm
Luminous efficiency [1]	approx. 85 lm/W
Light type/-color	adjustable white
Colour temperatur	approx. 3.000 K; 4.000 K; 5.000 K; 6.500 K
Color rendering index	CRI ≥ 90; R9 ≥ 50
Light distribution	Direct; approx. 100 %
Beam angle	75°
Chromaticity tolerance LED	< 3 SDCM
Glare control	optical film; Prism aperture
Luminance (L65)	≤ 12.000 cd/m²
UGR class (4H 8H; EN 12464-1)	≤ 25
System of protection/Class	IP 20; I with plug-in power supply; III without plug-in power supply
Technology	Touch DIM
Operation	Multi-function switch
Housing	Aluminium coloured anodised
Light source cover	Structured; Plastic
Arm	Aluminium coloured anodised
Balance of articulation joints	Spring
Mains lead	ca. 3,4 m; Mains plug; CEE 7/VII
Fastening	Tap16; Table clamp (accessory); Screw-down flange
Decorative contrast side parts	Black
EAN	4013330131623
Weight without/incl. packaging	ca. 2,3 kg; 4,2 kg
Packaging dimensions	ca. 865 mm; 420 mm; 102 mm

[1] For luminaires with separate control gear, the luminous efficacy refers to the luminaire head without control g

Errors and technical changes excepted. Images can vary from original.
Photometric and electrical data may vary due to component tolerances.

© 19/05/2025 H.Waldmann GmbH & Co. KG

Arm-mounted luminaire TANEO
TND 2100/930-965/D

113736000-00810093

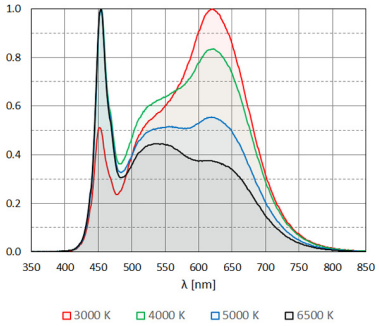

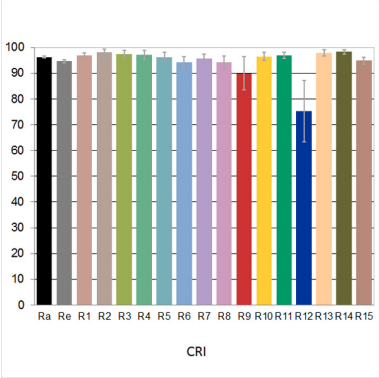

© 19/05/2025 H.Waldmann GmbH & Co. KG